I2C 1602 Serial LCD Module

Product features:

The I2C 1602 LCD module is a 2 line by 16 character display interfaced to an I2C daughter board. The I2C interface only requires 2 data connections, +5 VDC and GND to operate.

For in depth information on I2C interface and history, visit: http://www.wikipedia/wiki/i2c

Specifications:

Display	2 lines by 16 character
I2C Address Range	0x20 to 0x27 (Default=0x27, addressable)
Operating Voltage	5 Vdc
Backlight	White
Contrast	Adjustable by potentiometer on I2c interface
Size	80mm x 36mm x 20 mm
Viewable Area	66mm x 16mm

www.CircuitAttic.com

Power:

The device is powered by a single 5Vdc connection.

Pinout Diagram:

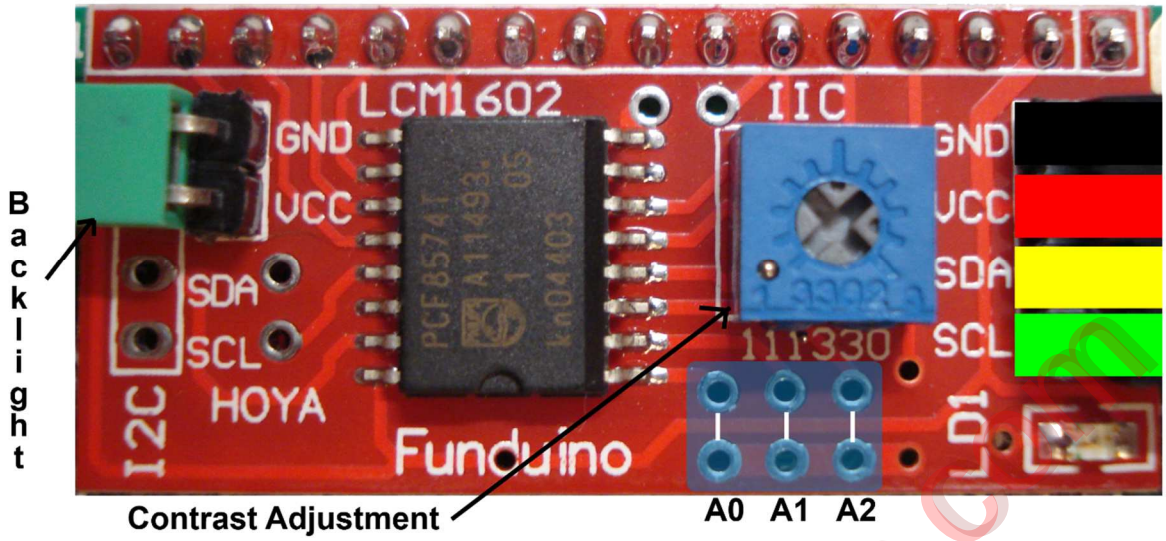

Pin/Control Descriptions:

Pin #	Name	Type	Description
1	GND	Power	Supply & Logic ground
2	VCC	Power	Digital I/O 0 or RX (serial receive)
3	SDA	I/O	Serial Data Line
4	SCL	CLK	Serial Clock Line
A0	A0	Jumper	Optional address selection A0 – see below
A1	A1	Jumper	Optional address selection A1 – see below
A2	A2	Jumper	Optional address selection A2 – see below
Backlight		Jumper	Jumpered - enable backlight, Open - disable backlight
Contrast		Pot	Adjust for best viewing

Addressing:

A0	A1	A2	Address
Open	Open	Open	0x27
Jumper	Open	Open	0x26
Open	Jumper	Open	0x25
Jumper	Jumper	Open	0x24
Open	Open	Jumper	0x23
Jumper	Open	Jumper	0x22
Open	Jumper	Jumper	0x21
Jumper	Jumper	Jumper	0x20

WWW.CircuitAttic.com

Software:

Download the required LCD Arduino™ library for this device from:

http://www.circuitattic.com/downloads/category/3-sample-code.html?download=9%3Aanother-i2c-library-easier-to-use

Replace current liquid crystal library found in the Arduino library directory with the above
(Note: If you use the examples included with the library, be sure to change address to 0x27)

Simple example using library above.

```
#include <Wire.h>
#include <LiquidCrystal_I2C.h>
#if defined(ARDUINO) && ARDUINO >= 100
#define printByte(args) write(args);
#else
#define printByte(args) print(args,BYTE);
#endif
LiquidCrystal_I2C lcd(0x27,16,2); // set the LCD address to 0x27 for a
//chars and 2 line display
void setup()
{
      lcd.init(); // initialize the lcd
      lcd.backlight();
      lcd.clear();
      delay(100);
      for(int i = 0; i< 3; i++)
      {
            lcd.backlight();
            delay(250);
            lcd.noBacklight();
            delay(250);
      }
      lcd.backlight();
}
void loop()
{
      int x=0;
      lcd.clear();
      lcd.setCursor(2,0); //Start at character 0 on line 0
      lcd.print("Hello World");
      lcd.setCursor(0,1); //Start at character 0 on line 1
      lcd.print("circuitattic.com");
      delay(3000); //Wait 3 seconds
      lcd.clear();
      lcd.setCursor(0,0); //Start at character 0 on line 0
      lcd.print("Cursor Blink");
      lcd.blink();
      delay(2000);
      lcd.setCursor(0,0);
      lcd.print("Cursor noBlink");
      lcd.noBlink();
      delay(2000);
}
```

www.CircuitAttic.com